SGXL SPRINGS & FOOT BOARD

DRAWING NO. SGXLEV-030 REV. 2

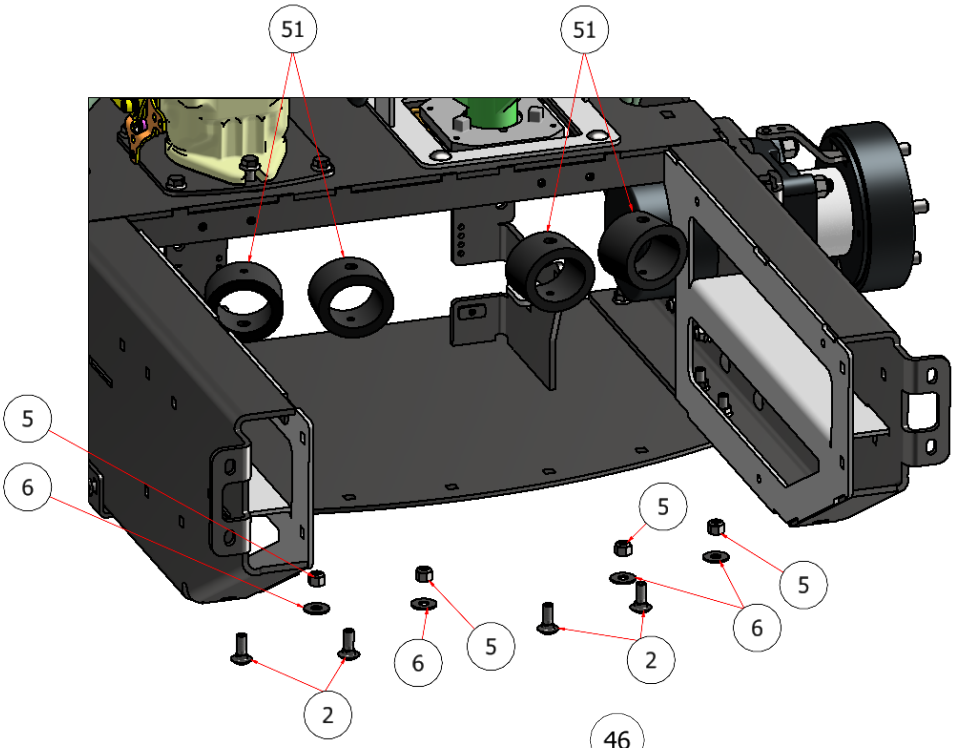

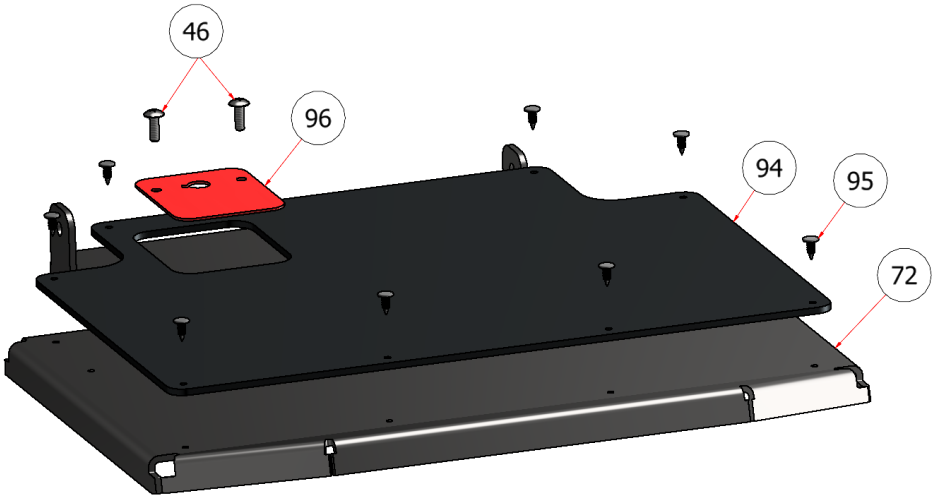

PARTS LIST			
ITEM	QTY	PART NUMBER	TITLE
2	23	CB-381SS	CARRIAGE BOLT, SS - 3/8-16 x 1
5	20	SSNNC-38	NYLOCK, SS - 3/8-16
6	24	FWSS-38	FLAT WASHER, SS - 3/8
46	6	TRPC-1434S	PHILLIPS PAN HEAD MACHINE SCREW, SS - 1/4-20 x 3/4
51	4	C60366	CUSHION, FOOT BOARD
72	1	W21-371	FOOT BOARD, SG46/52
94	1	C60390	PAD, FOOT BOARD
95	8	C60302	PIN, FOOT BOARD CUSHION
96	1	R21-024	SG SPRAY SWITCH MOUNT

NOTE: *Quantities in the parts list above are total per machine. Please note the quantities used in the sub-assemblies.*

SGXL SPRINGS & FOOT BOARD

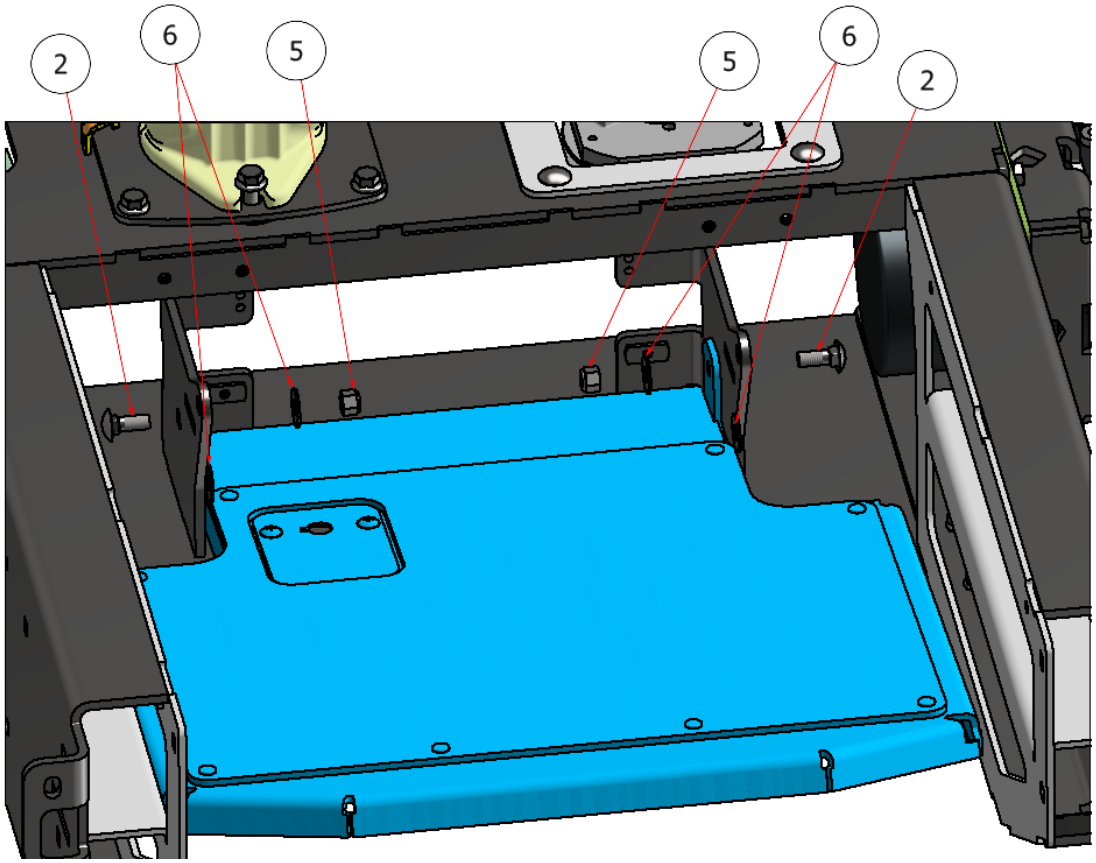

PARTS LIST			
ITEM	QTY	PART NUMBER	TITLE
2	23	CB-381SS	CARRIAGE BOLT, SS - 3/8-16 x 1
5	20	SSNNC-38	NYLOCK, SS - 3/8-16
6	24	FWSS-38	FLAT WASHER, SS - 3/8

NOTE: *Quantities in the parts list above are total per machine. Please note the quantities used in the sub-assemblies.*