SGXL SPEED BAR & JOY STICK

DRAWING NO. SGXLEV-011 REV. 2

STEELGREEN MANUFACTURING

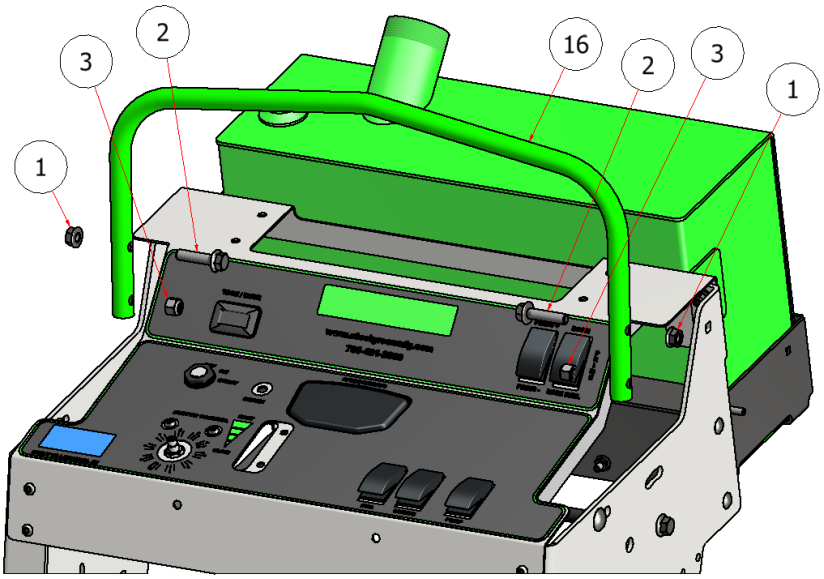

PARTS LIST			
ITEM	QTY	PART NUMBER	TITLE
1	6	HFNCS-38S	HEX FLANGE NUT, SS - 3/8-16
2	4	HFSSC-3815	HEX FLANGE BOLT, 3/8 X 1.5
3	2	SSNNC-38	NYLOCK, SS - 3/8-16
16	1	R31022	SPEED BAR

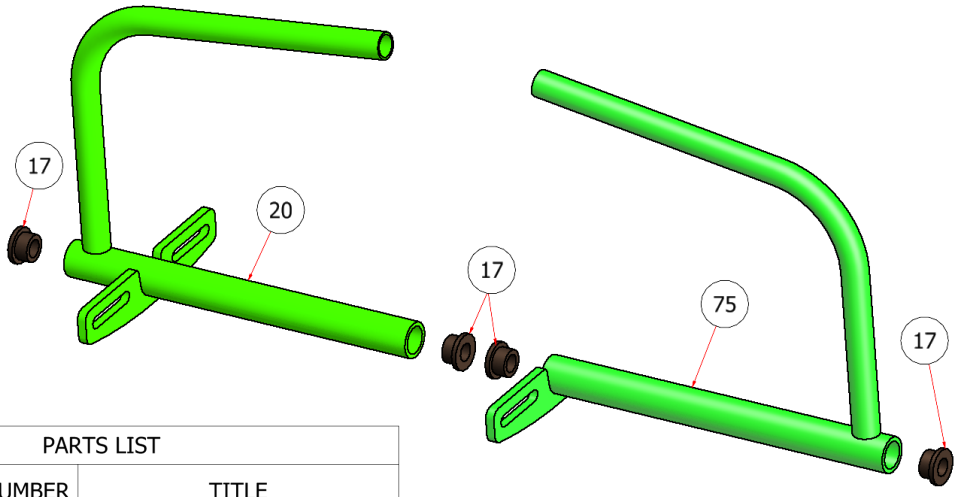

PARTS LIST			
ITEM	QTY	PART NUMBER	TITLE
17	4	C60303	BUSHING, JOY STICK
20	1	W21-036	JOY STICK
75	1	W21250	JOY STICK, RIGHT SIDE, SG54

NOTE: *Quantities in the parts list above are total per machine. Please note the quantities used in the sub-assemblies.*

SGXL UPPER DASH PANEL

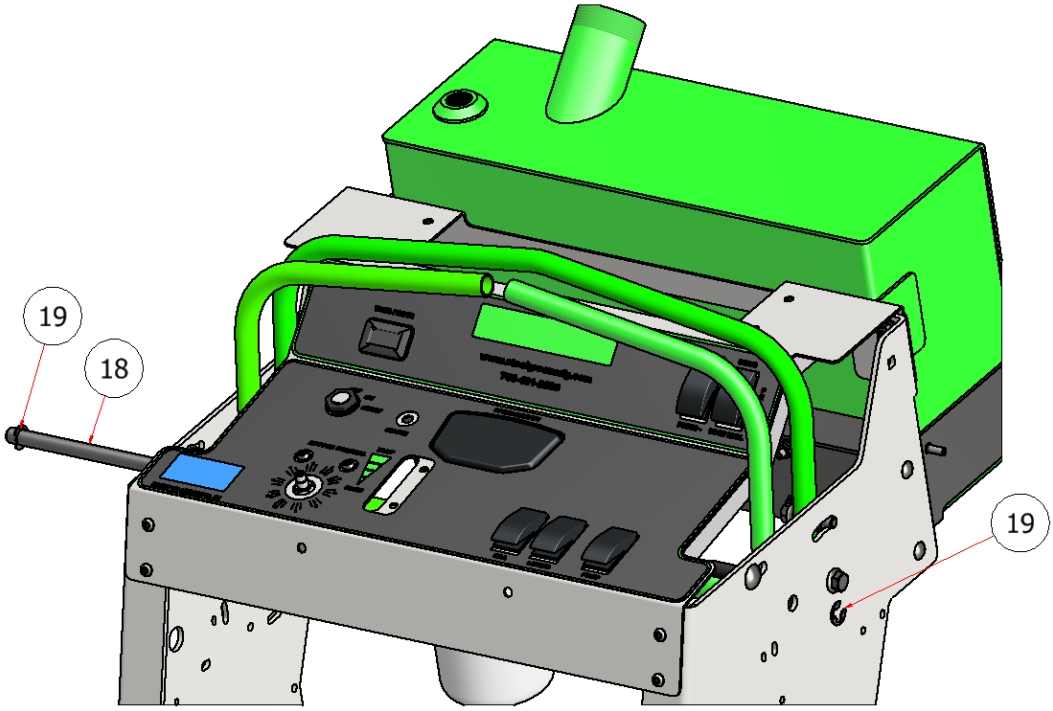

PARTS LIST			
ITEM	QTY	PART NUMBER	TITLE
18	1	R31012	ROD, JOY STICK
19	2	ECSS-050	E-CLIP, 1/2"

NOTE: *Quantities in the parts list above are total per machine. Please note the quantities used in the sub-assemblies.*

SGXL UPPER DASH PANEL

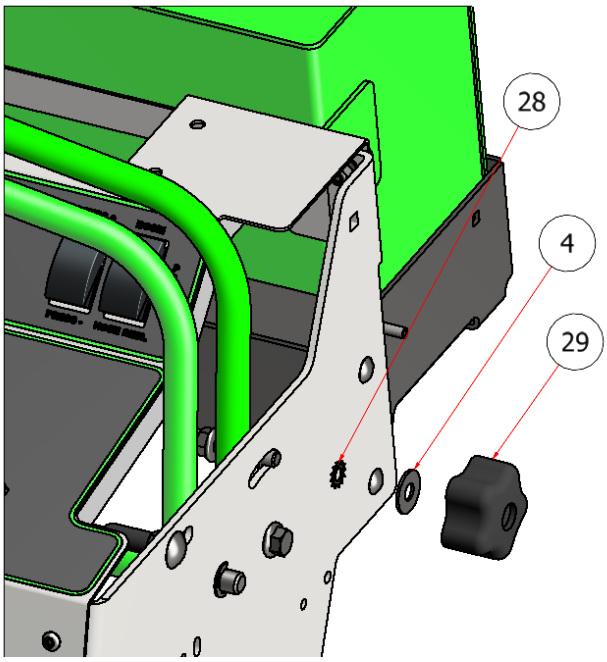

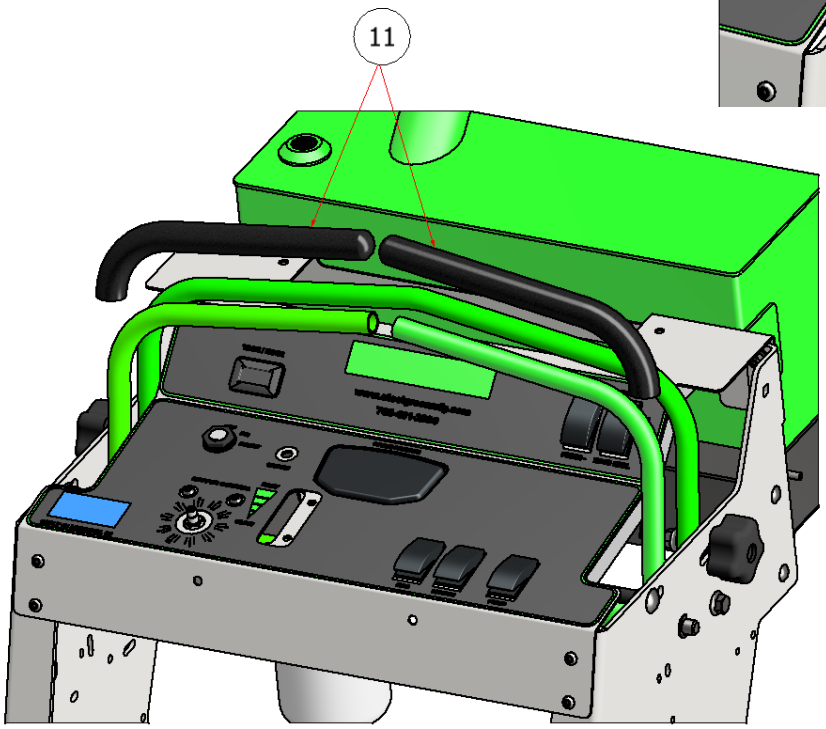

PARTS LIST			
ITEM	QTY	PART NUMBER	TITLE
4	2	FWSS-38	FLAT WASHER, SS - 3/8
11	2	C60200	GRIP, JOY STICK
28	2	LWESS-38	STAR WASHER, 3/8
29	2	C60202	KNOB, RUBBER, SPEED BAR

NOTE: *Quantities in the parts list above are total per machine. Please note the quantities used in the sub-assemblies.*

SGXL UPPER DASH PANEL

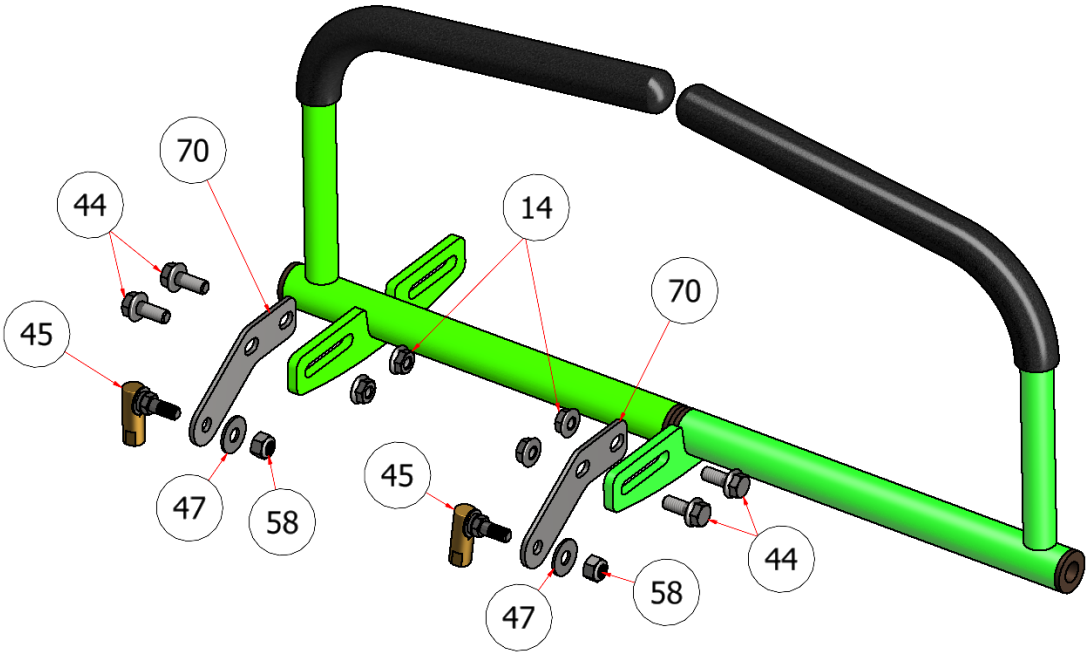

PARTS LIST			
ITEM	QTY	PART NUMBER	TITLE
14	10	HFNCS-516S	HEX NUT, 5/16"
44	4	HFSSC-31375	HEX FLANGE BOLT, 5/16 X 3/4
45	2	C60305	STEERING ROD END, THREAD & BALL ASSY.
47	2	FWSS-516	FLAT WASHER, 5/16
58	2	SSNC-313	5/16" NUT, NYLOCK
70	2	R23-241	SS SGXL JOYSTICK LEVER EXTENSION

NOTE: *Quantities in the parts list above are total per machine. Please note the quantities used in the sub-assemblies.*