SGXL YOKES & TIRES

DRAWING NO. SGXLEV-037 REV. 3

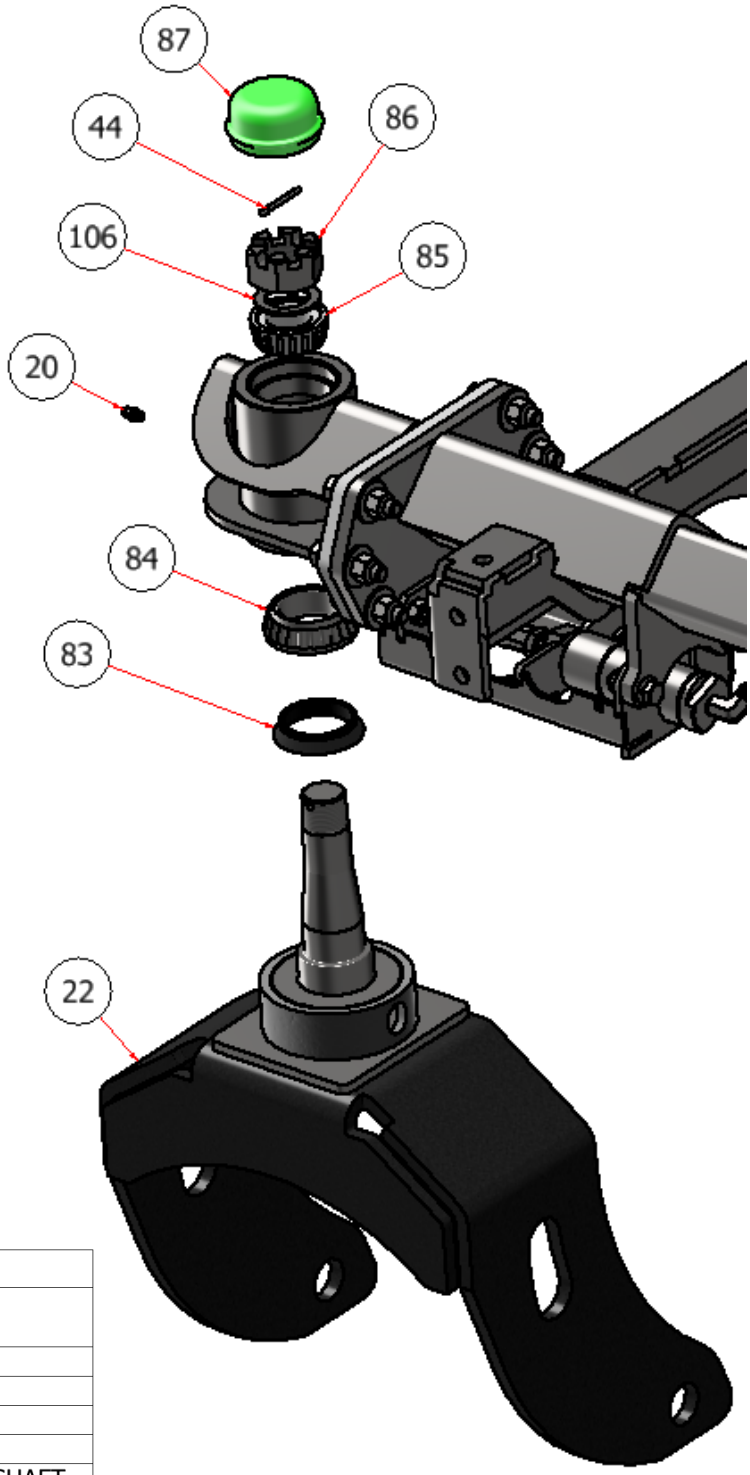

PARTS LIST			
ITEM	QTY	PART NUMBER	TITLE
20	3	6F-316D	GREASE FITTING
22	1	W23-008	WHEEL CASTER, SGXL
44	2	CPSS 532X112	COTTER PIN, STEEL
83	2	T90322	RUBBER SEAL, XL
84	2	T90320	WHEEL BEARING, 1.375 SHAFT
85	2	T90308	BEARING, SPINDLE
86	2	T90313	NUT, SPINDLE
87	2	T90306	PLASTIC DUST CAP
106	2	SHIM-1	FLAT WASHER, SS - 1

NOTE: *Quantities in the parts list above are total per machine. Please note the quantities used in the sub-assemblies.*

SGXL YOKES & TIRES

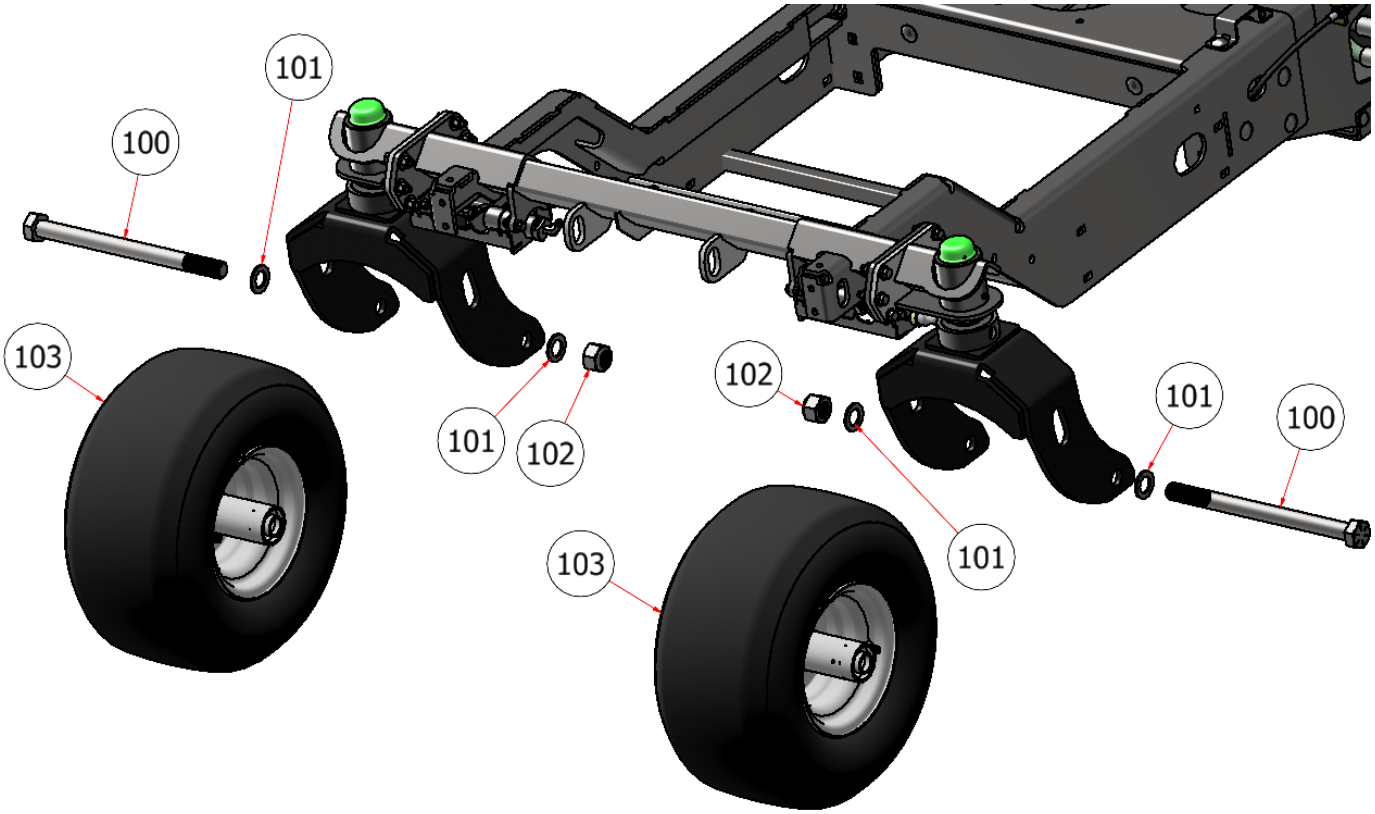

PARTS LIST			
ITEM	QTY	PART NUMBER	TITLE
100	2	HB 1-8X13	HEX BOLT, 1" X 13"
101	4	SSJN 1-14	FLAT WASHER, SS-1
102	2	SSNYLOCK 1.0-8	LOCK NUT, SS-1
103	2	T90019-G	FRONT TIRE, SGXL

NOTE: *Quantities in the parts list above are total per machine. Please note the quantities used in the sub-assemblies.*