1 GALLON FOAM MARKER ATTACHMENT

PART NO. P10011

SGATT-011 Rev. 1

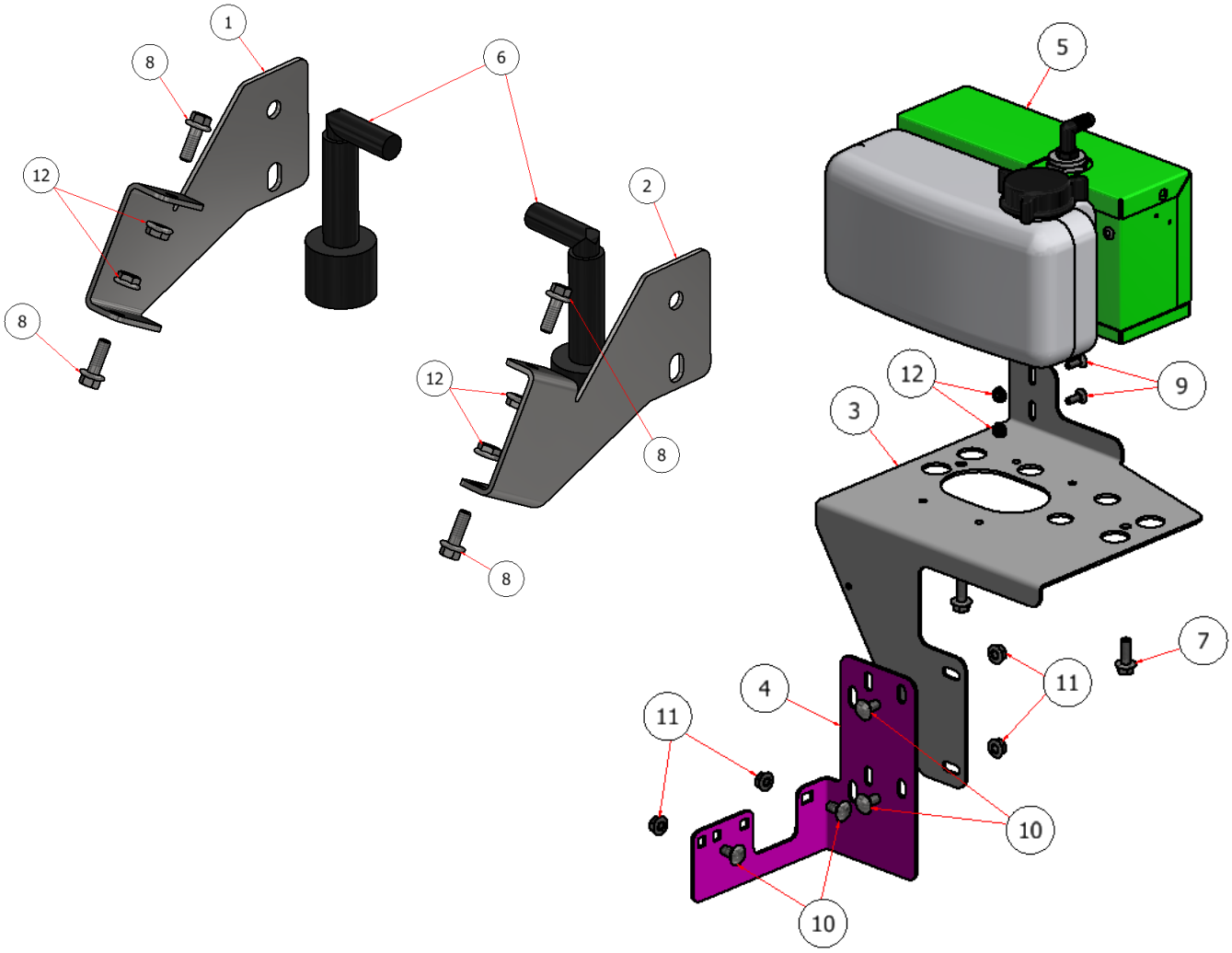

1 GALLON FOAM MARKER KIT P10011			
ITEM	QTY	PART NUMBER	DESCRIPTION
1	1	R22-002-R	FOAM MARKER BOOM BRACKET
2	1	R22-002-L	FOAM MARKER BOOM BRACKET LEFT
3	1	R22-060	BRACKET, FOAM MARKER SUPPORT, 1 & 2.5 GALLON
4	1	R22-112	SUPPORT, LOWER, FOAM MARKER
5	1	X31001	1 GALLON FOAM MARKER, PUMP\TANK ASSY.
6	2	X31100-2012	1 GALLON FOAM DROPPER
7	2	HFSSC-381	HEX FLANGE BOLT, SS - 3/8-16 x 1
8	4	HFSSC-1475	HEX FLANGE BOLT, SS-1/4-20 X 3/4
9	2	CB-1434SS	CARRIAGE BOLT, SS - 1/4-20 x 3/4
10	6	CB-3834SS	CARRIAGE BOLT, SS - 3/8-16 x 3/4
11	4	HFNCS-38S	HEX FLANGE NUT - 3/8-16
12	6	HFNCS-14S	HEX FLANGE NUT - 1/4-20
13	1	SG-7G1	7 GAL. WIRE HARNESS
14	1	E40202	2-WAY ROCKER SWITCH