HYDRAULIC LIFT ATTACHMENT

PART NO. K10081

SGATT-014 Rev. 4

STEELGREEN MANUFACTURING

CONTROL VALVE

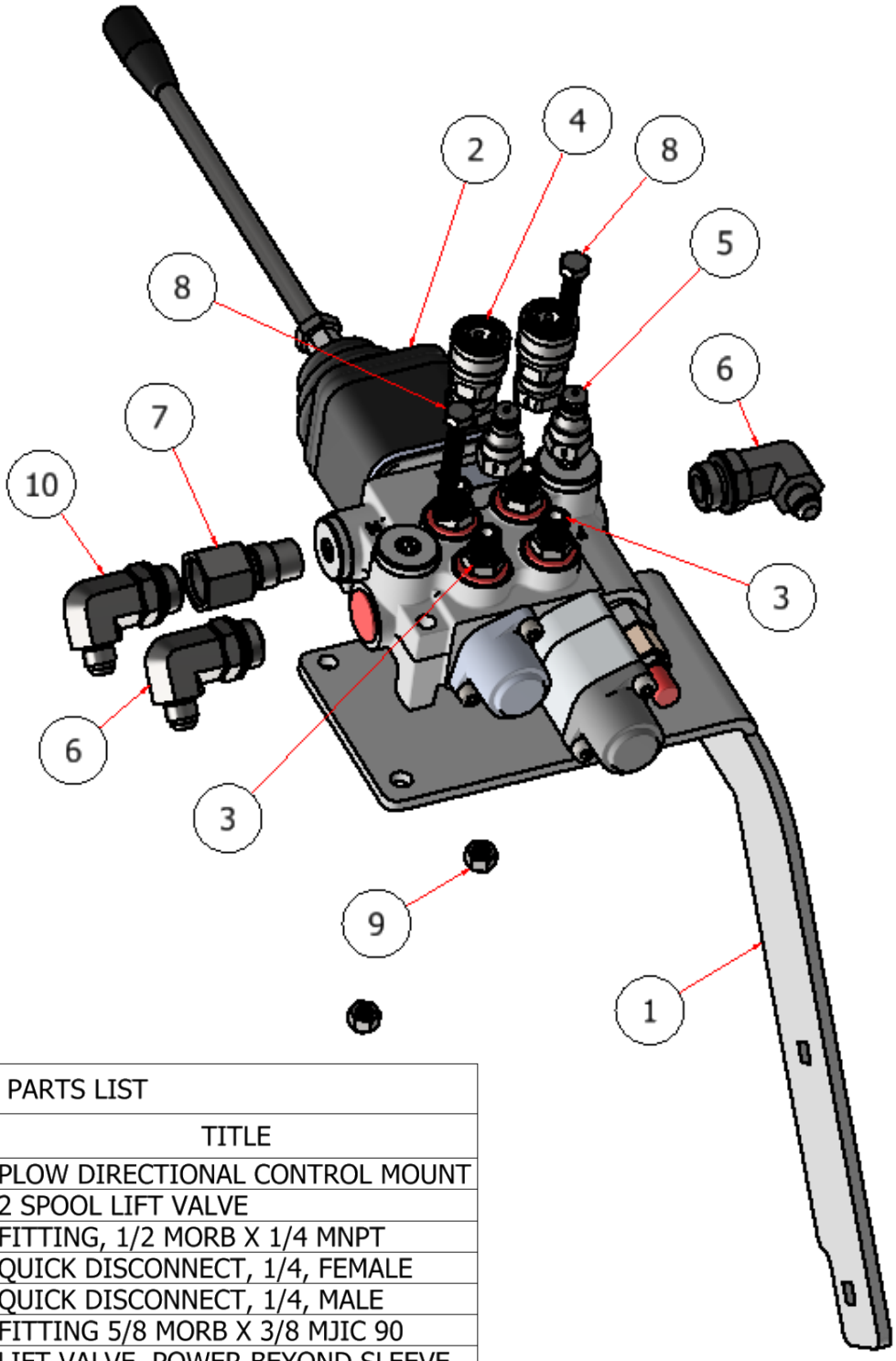

PARTS LIST			
ITEM	QTY	PART NUMBER	TITLE
1	1	PL009	PLOW DIRECTIONAL CONTROL MOUNT
2	1	SP10001	2 SPOOL LIFT VALVE
3	4	H84071	FITTING, 1/2 MORB X 1/4 MNPT
4	2	H85010	QUICK DISCONNECT, 1/4, FEMALE
5	2	H85011	QUICK DISCONNECT, 1/4, MALE
6	2	H84070	FITTING 5/8 MORB X 3/8 MJIC 90
7	1	SP10008	LIFT VALVE, POWER BEYOND SLEEVE
8	2	HFSSC-31325	HEX BOLT, SS, 5/16-18 X 2-1/2
9	2	SSNC-313	5/16" NUT, NYLOCK
10	1	H84099	FITTING 5/8 MORB X 3/8 MJIC 90

STEELGREEN MANUFACTURING

LIFT

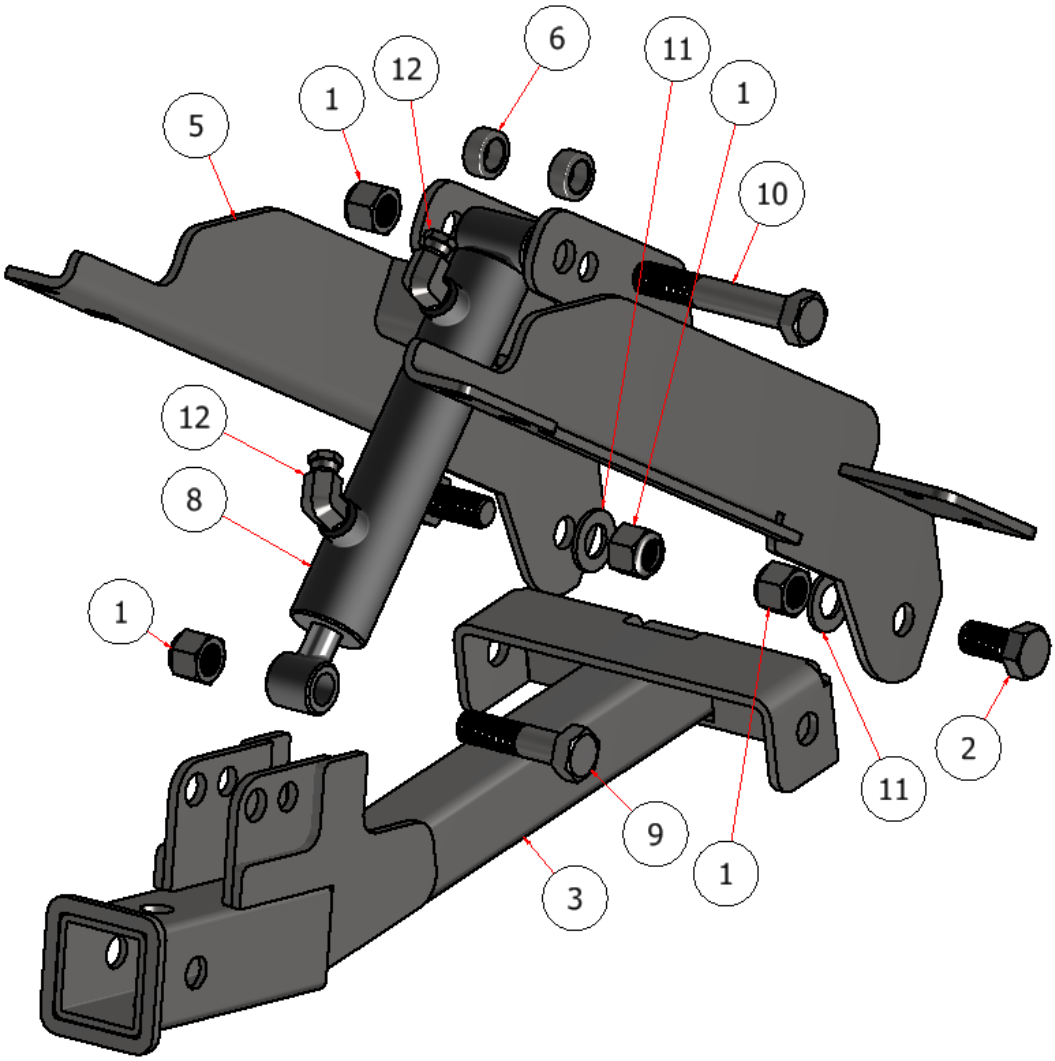

PARTS LIST			
ITEM	QTY	PART NUMBER	DESCRIPTION
1	4	SS NYLOCK .750-10	HEX NUT, 3/4 NYLOCK SS
2	2	HFB .750-10X1.5	HEX BOLT, 3/4 X 1.5
3	1	W-PL004-2023	PLOW HITCH, LOWER
5	1	W-PL007-6	PLOW HITCH, UPPER
6	2	PU-2 SPACER .5	SPACER, 3/4 X 1/2
8	1	SP1002	CYLINDER, HYDRAULIC, 1.5 X 6 X .75
9	1	HFB.75-10X3	HEX BOLT, 3/4-10 X 3 SS
10	1	HFB,75-10X4.5	HEX BOLT, 3/4 X 4-1/2 SS
11	2	FWSS-34	FLAT WASHER, SS - 3/4
12	2	SG-K10007-SPHK	3/8" MNPT X 1/4" FNPT SWIVEL 90