2.5 GALLON FOAM MARKER ATTACHMENT

PART NO. K299501

SGATT-009 Rev. 2

STEELGREEN MANUFACTURING

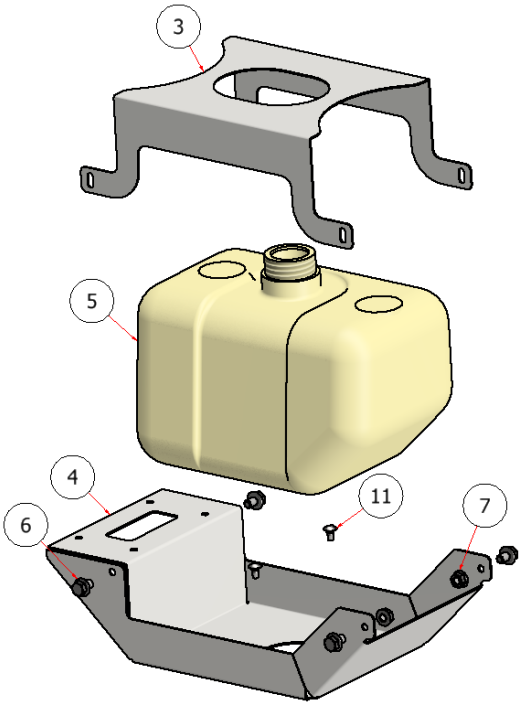

PARTS LIST			
ITEM	QTY	PART NUMBER	DESCRIPTION
3	1	R22-111	2.5 GALLON FOAM MARKER HOLDER
4	1	R22-110	2.5 GALLON FOAM MARKER TANK BASE
5	1	FL0025	TANK, 2.5 GALLON, FOAM MARKER
6	4	HFSSC-3812	HEX FLANGE BOLT, 3/8 X 1/2
7	4	HFNCS-38S	HEX FLANGE NUT, SS - 3/8-16
11	2	CB-145SS	CARRIAGE BOLT, 1/4 X 1/2

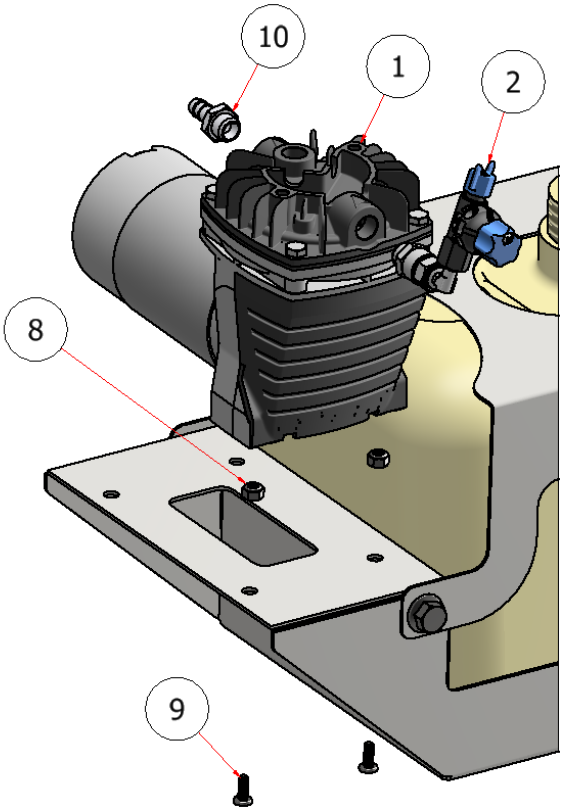

PARTS LIST			
ITEM	QTY	PART NUMBER	DESCRIPTION
1	1	OF19-080	PUMP, 2.5 GALLON FOAM MARKER
2	1	901843	VALVE ASSEMBLY, FOAM MARKER
8	2	SSNNC 10-32B	HEX NUT, NYLOCK, 10-32SS
9	2	TRPC-1012S	SCREW, PHILLIPS, #10 X 1/2
10	1	200214	BARB FITTING, 3/8" FM

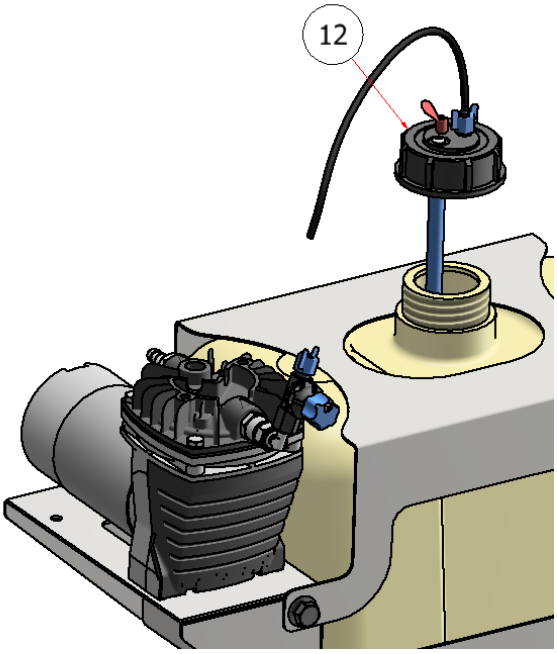

PARTS LIST			
ITEM	QTY	PART NUMBER	DESCRIPTION
12	1	901312	CAP, 2.5 GALLON FOAM MARKER

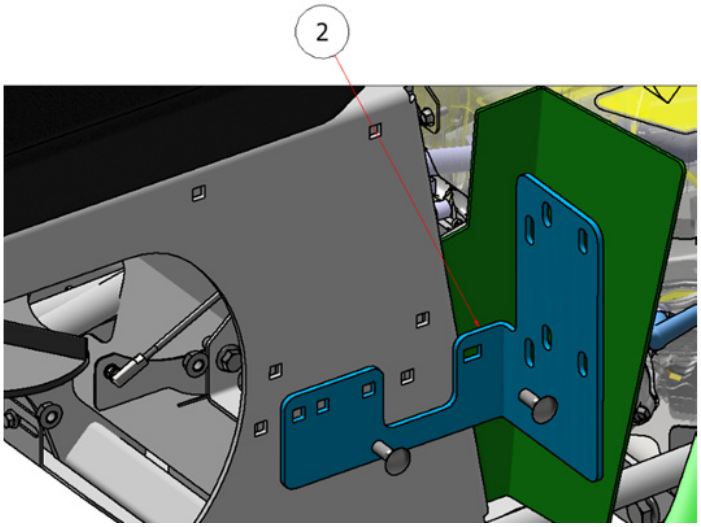

PARTS LIST			
ITEM	QTY	PART NUMBER	TITLE
2	1	R22-112	SG FOAM MARKER SUPPORT

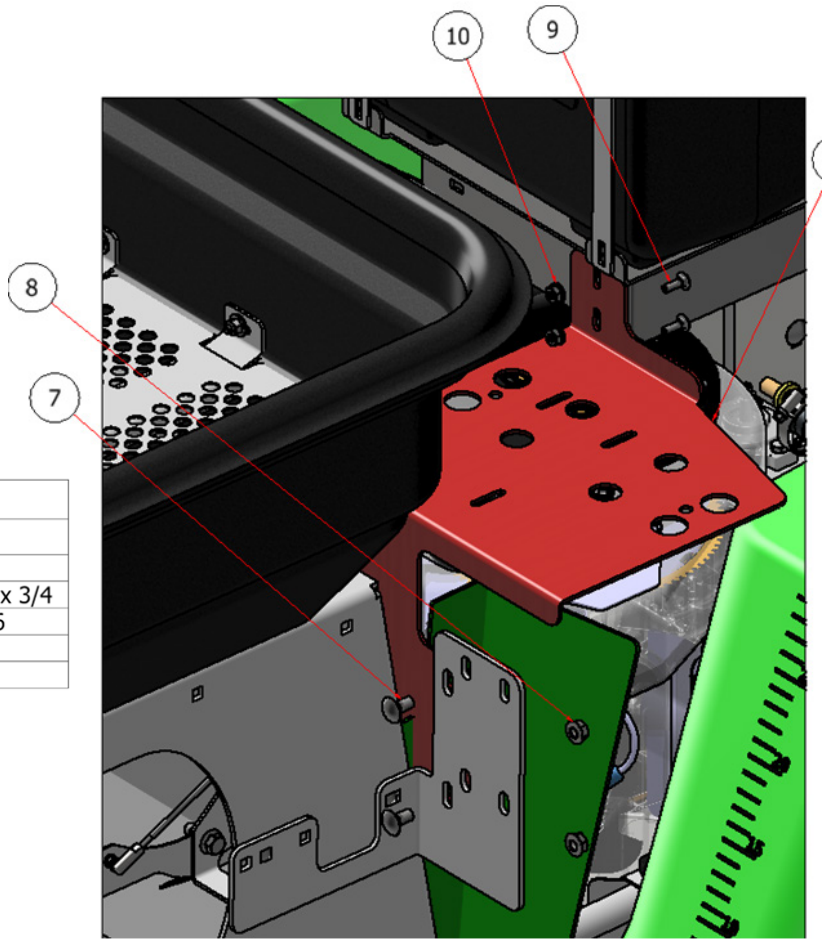

PARTS LIST			
ITEM	QTY	PART NUMBER	TITLE
1	1	R22-060	SG FOAM MARKER MOUNT
7	4	CB-3834SS	CARRIAGE BOLT, SS - 3/8-16 x 3/4
8	2	HFNCS-38S	HEX FLANGE NUT, SS - 3/8-16
9	2	CB-1434	CARRIAGE BOLT, 1/4 X 3/4
10	2	HFNCS-25S	HEX FLANGE NUT, 1/4

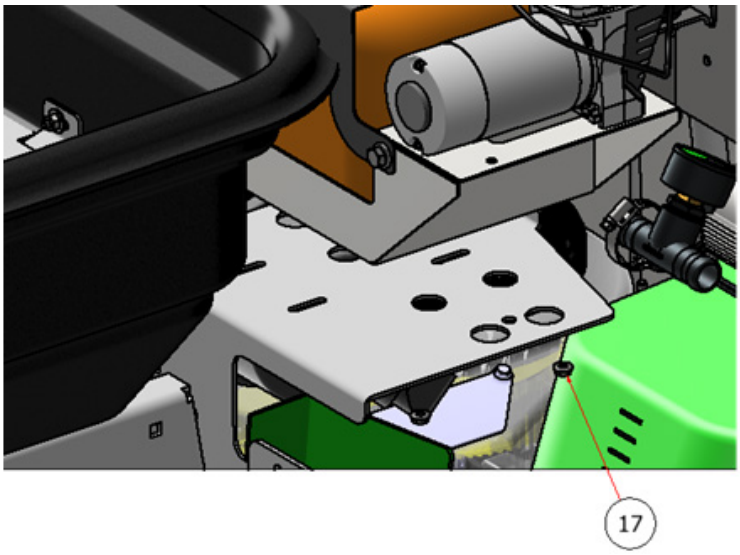

PARTS LIST			
ITEM	QTY	PART NUMBER	TITLE
17	2	HFNCS-14SS	HEX FLANGE NUT, 1/4-20

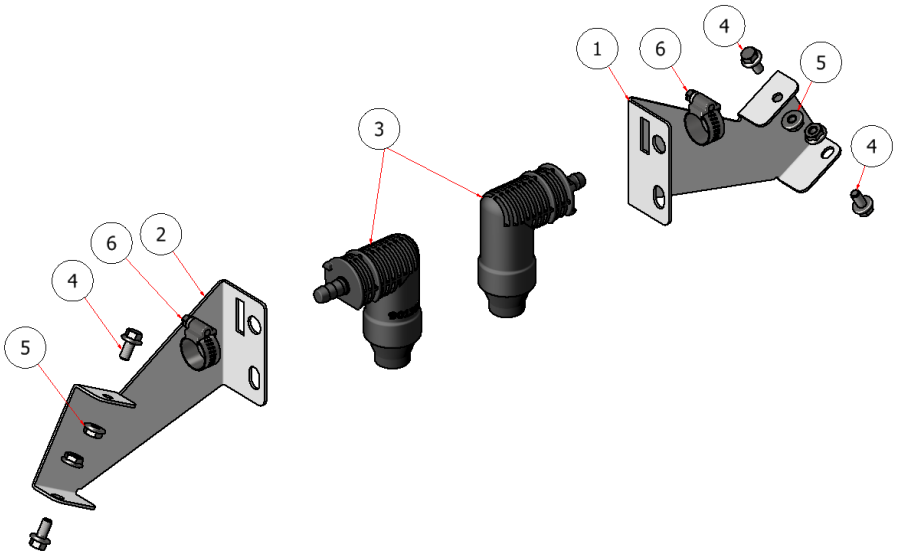

PARTS LIST			
ITEM	QTY	PART NUMBER	DESCRIPTION
1	1	R22-114-L	BRACKET, FOAM MARKER DROPPER, LEFT
2	1	R22-114	BRACKET, FOAM MARKER DROPPER, RIGHT
3	2	901309	DROPPER, FOAM MARKER, 2.5 GALLON
4	4	HFSSC-145	HEX FLANGE BOLT, SS - 1/4-20 x 1/2
5	4	HFNCS-14S	HEX FLANGE NUT, 1/4
6	2	MS4	HOSE CLAMP, 3/8

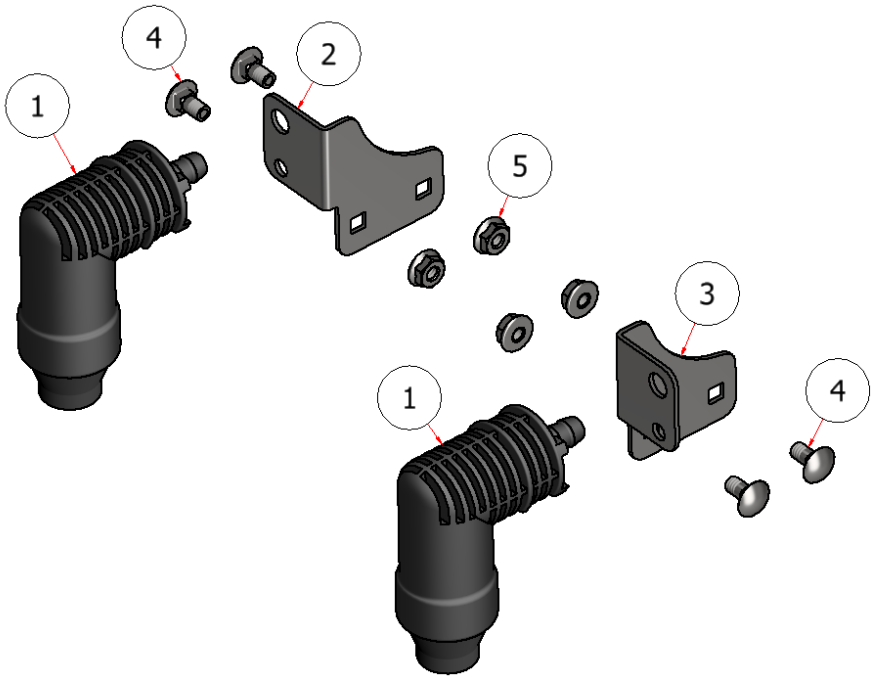

PARTS LIST			
ITEM	QTY	PART NUMBER	DESCRIPTION
1	2	901309	DROPPER, FOAM MARKER, 2.5 GALLON
2	1	R22-149	BRACKET, FOAM MARKER DROPPER, 6 NOZZLE, RIGHT
3	1	R22-149-L	BRACKET, FOAM MARKER DROPPER, 6 NOZZLE, LEFT
4	4	CB-145SS	CARRIAGE BOLT, 1/4 X 1/2
5	4	HFNCS-14SS	HEX FLANGE NUT, 1/4-20